RoHS compliant

REV.	ECN NO.	DESCRIPTION	DESIGN	APPROVAL	DATE
X1		NEW	YAOXJ	Winny_Yao	2017/08/03
X2		变更SAS线材，由100欧变更为85欧	YAOXJ	Winny_Yao	2019/04/08

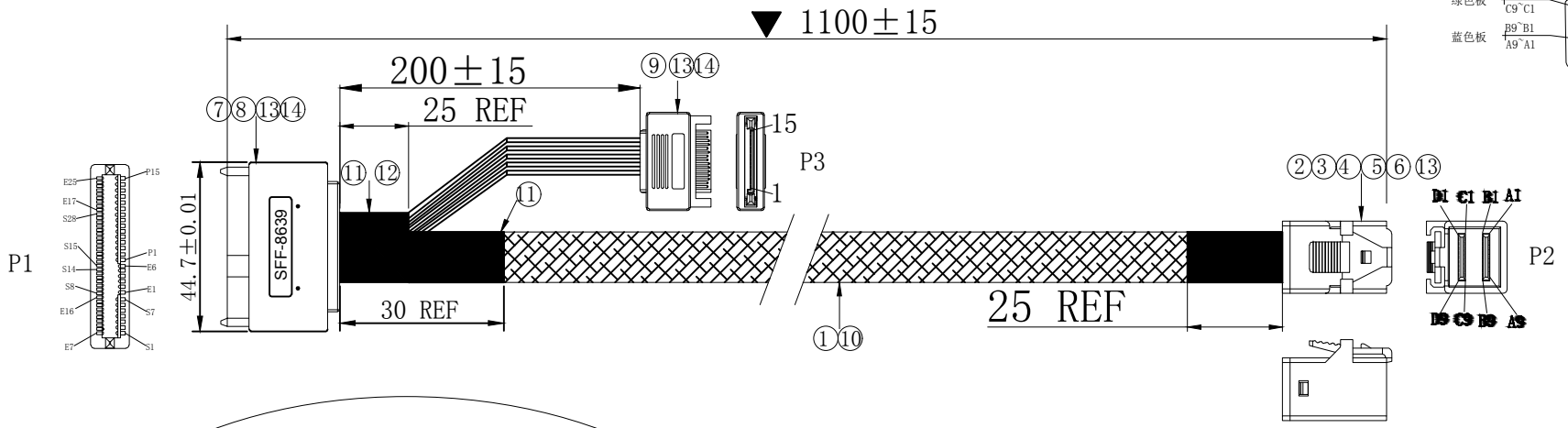

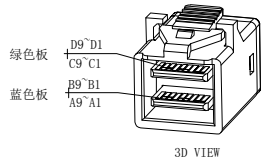

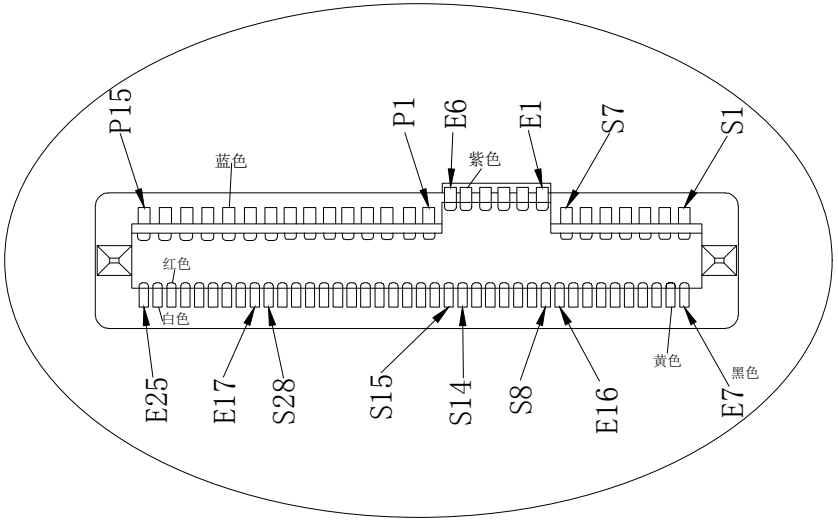

备注：

1. 成品100%做导通测试；
2. 绝缘阻抗：10M Ohms DC 300V 0.01S；
3. 导通阻抗：3 Ohms；
4. 产品符合欧盟RoHS环保标准；

X	±1
XX	±0.5
XXX	±0.3
0-180°	±3°
UNITS:	mm

THESE DRAWINGS AND SPECIFICATIONS ARE THE PROPERTY OF ZHIJI AND SHALL NOT BE REPRODUCED, COPIED OR CUED IN ANY MANNER WITHOUT THE PRIOR WRITTEN CONSENT OF ZHIJI

Customer P/N.: NA
Customer REV .: A
PART NO. LRSF4339-1.1M
APPD: Winny_Yao
CHKD:
DRAW: YAOXJ

LR-LINK

TITLE: MINISAS HD SFF-8643 TO SFF-8639+SATA 15P/M L=1100mm

DWG NO: RDN201904080001

SCALE	SHEET	REV.
NONE	1/2	X2

REV.	ECN NO.	DESCRIPTION	DESIGN	APPROVAL	DATE

接线表

P1	P3	电子线颜色
大E3	1+2+3	(18AWG)橙色
P5+P6	4+5+6	(18AWG)黑色
P7+P8+P9	7+8+9	(18AWG)红色
P12	10+11+12	(18AWG)黑色
P13+P14+P15	13+14+15	(18AWG)黄色

P2			P1	
GND	D9		S25	GND
PCIE TX2-	D8		S24	PCIE TX2-
PCIE TX2+	D7		S23	PCIE TX2+
GND	D6		E12/S22	GND
PCIE TX0-	D5		E11	PCIE TX0-
PCIE TX0+	D4		E10	PCIE TX0+
GND	D3		E9	GND
SB CLK	D2	红色	E23	SB CLK
SB DATA	D1	白色	E24	SB DATA
ACTMTY	C1	蓝色	P11	ACTMTY
SCEBANO 2	C2			SCEBANO 2
GND	C3		S16	GND
PCIE TX1+	C4		S17	PCIE TX1+
PCIE TX1-	C5		S18	PCIE TX1-
GND	C6		S19/S28	GND
PCIE TX3+	C7		E17	PCIE TX3+
PCIE TX3-	C8		E18	PCIE TX3-
GND	C9		E19	GND
GND	B9		S25	GND
PCIE RX2-	B8		S26	PCIE RX2-
PCIE RX2+	B7		S27	PCIE RX2+
GND	B6		E12/S28	GND
PCIE RX0-	B5		E13	PCIE RX0-
PCIE RX0+	B4		E14	PCIE RX0+
GND	B3		E15	GND
GND	B2			GND
RST	B1	紫色	E5	RST
GND	A0			GND
CLOCK+	A1		E7	CLOCK+
CLOCK-	A2		E8	CLOCK-
GND	A3		E9/S22	GND
PCIE RX1+	A4		S21	PCIE RX1+
PCIE RX1-	A5		S20	PCIE RX1-
GND	A6		S19/E22	GND
PCIE RX3+	A7		E21	PCIE RX3+
PCIE RX3-	A8		E20	PCIE RX3-
GND	A9		E19	GND

序号	品名	规格描述	用量	单位
14	外模料	PVC,45P,黑色,UL94V-0	NA	KG
13	内模料	LDPE,透明 UL94V-0	NA	KG
12	醋酸胶布	W=20mm，T=0.12mm，黑色	NA	M
11	醋酸胶布	W=15mm，T=0.12mm，黑色	NA	M
10	编织网管	OD=10.0mm,NYLON,黑色单股	NA	M
9	连接器2	SATA 15P/M G/F 黑色	1	PCS
8	连接器1	SAS 68P/F 焊线式 180 镀金15U 黑色	1	PCS
7	PCB 3	SFF-8639 PCB 镀金30U 绿油白印	1	PCS
6	线架	SAS 36P 线架 USE SAS8643,NY66,UL94-V0,黑色	1	PCS
5	后塞	SAS 36P 后塞,USE SAS8643,ABS+PC,UL94-V0,黑色	1	PCS
4	塑胶壳	SAS 36P 主体,USE SAS8643,ABS+PC,UL94-V0,黑色	1	PCS
3	PCB 2	HD SAS 8643 PCB 镀金30U 绿油白印	1	PCS
2	PCB 1	HD SAS 8643 PCB 镀金30U 蓝油白印	1	PCS
1	线材	UL1007，18AWG(41/0.16)，镀锡铜 ，SR-PVC，OD=2.0mm	NA	M
		UL3302，30AWG(1/0.25)，镀锡铜 ，SR-PVC，OD=0.80mm		
		UL20744 30AWG8-1P+2EAM SAS3.0 CABLE 0.81*1.98MM 蓝色 100Ω		

X	±1
XX	±0.5
XXX	±0.3
0-180°	±3°
UNITS:	mm

THESE DRAWINGS AND SPECIFICATIONS ARE THE PROPERTY OF ZHIJI AND SHALL NOT BE REPRODUCED, COPIED OR CUED IN ANY MANNER WITHOUT THE PRIOR WRITTEN CONSENT OF ZHIJI

Customer P/N.:

Customer REV .: A

PART NO. LRSF4339-1.1M

APPD: Winny_Yao

CHKD:

DRAW: YAOXJ

LR-LINK

TITLE: MINISAS HD SFF-8643 TO SFF-8639+SATA 15P/M L=1100mm

DWG NO: RDN201904080001

SCALE	SHEET	REV.
NONE	2/2	X2